UniFi® 6 Professional

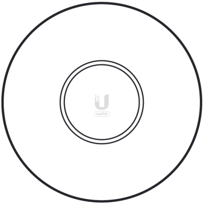

a

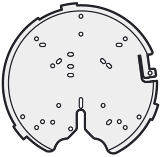

b

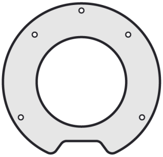

c

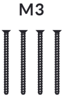

d

e

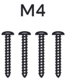

f

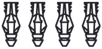

g

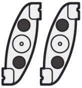

h

i

j

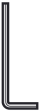

k

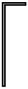

l

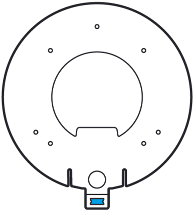

m

1

A

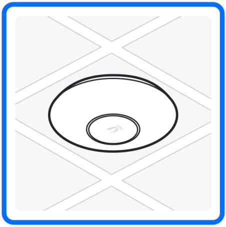

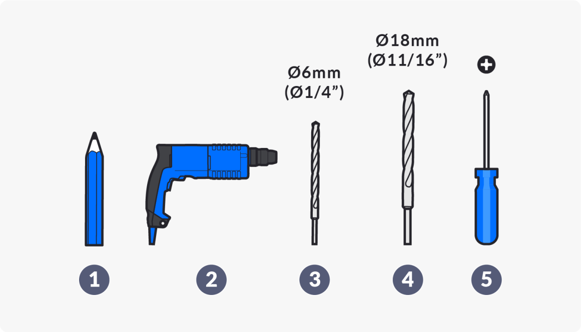
Ø6mm
(Ø1/4”)
Ø18mm
(Ø11/16”)
1
2
3
4
5

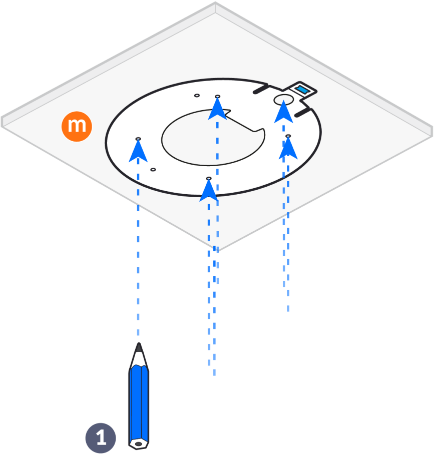

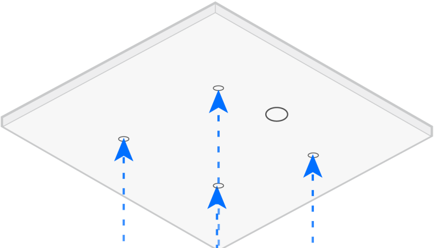

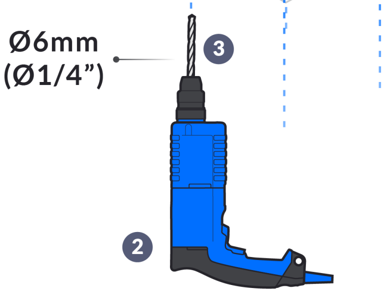

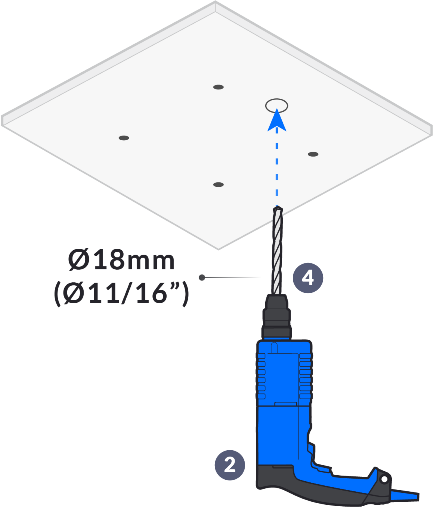
Ø18mm
(Ø11/16")
4
2

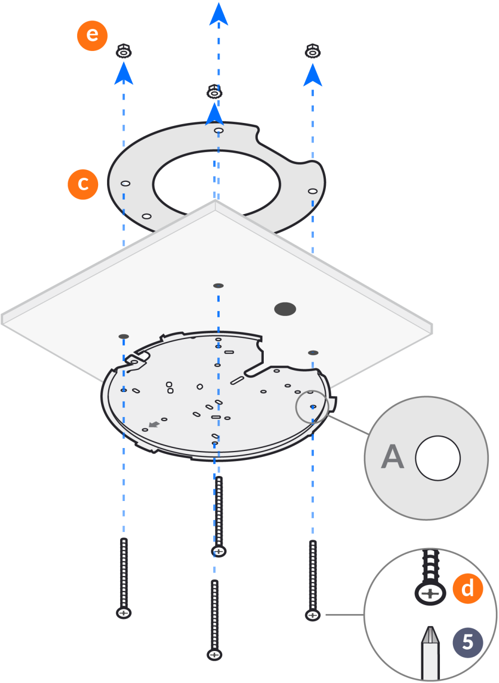

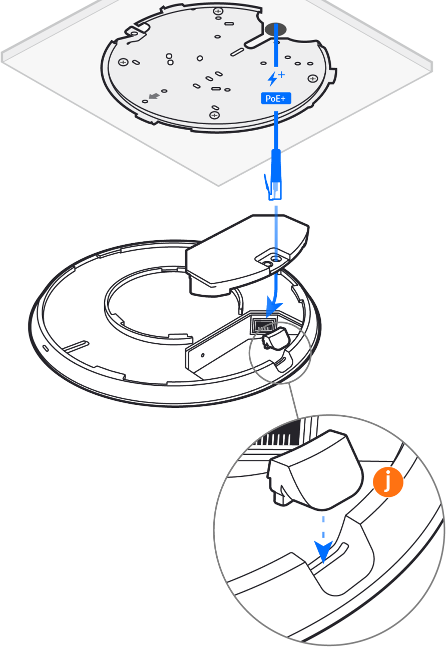

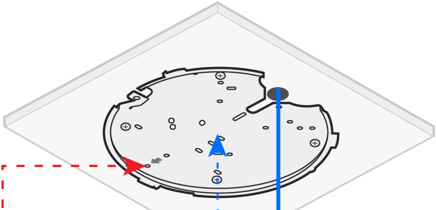

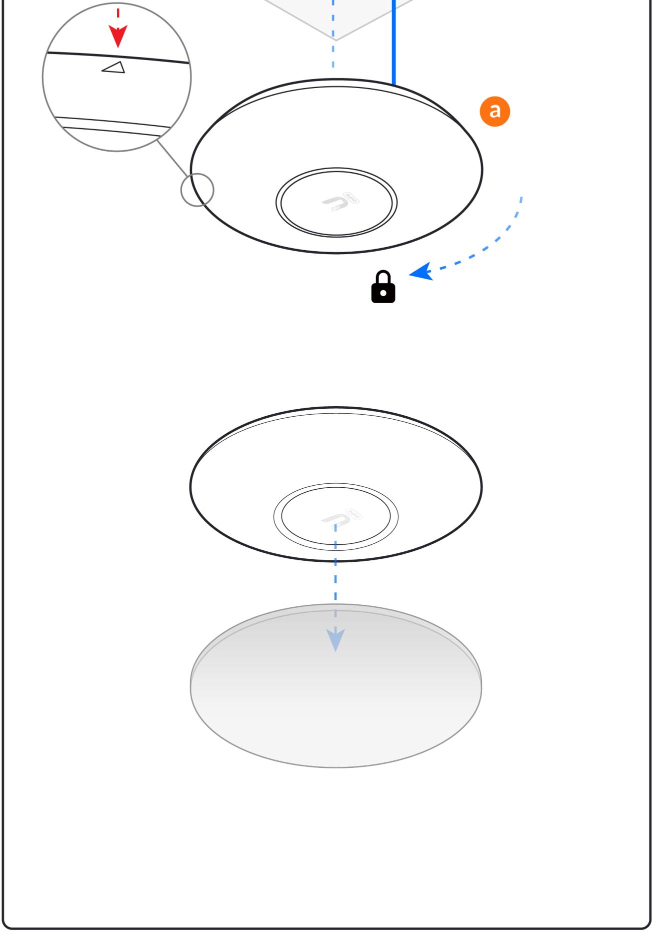

B

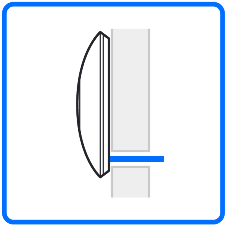

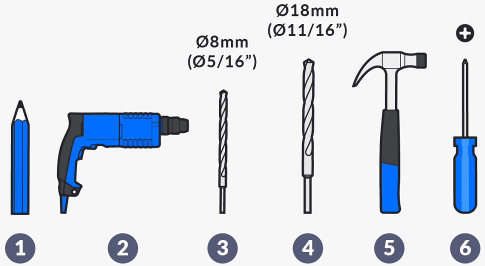
Ø8mm
(Ø5/16”)
Ø18mm
(Ø11/16”)
✚
1
2
3
4
5
6

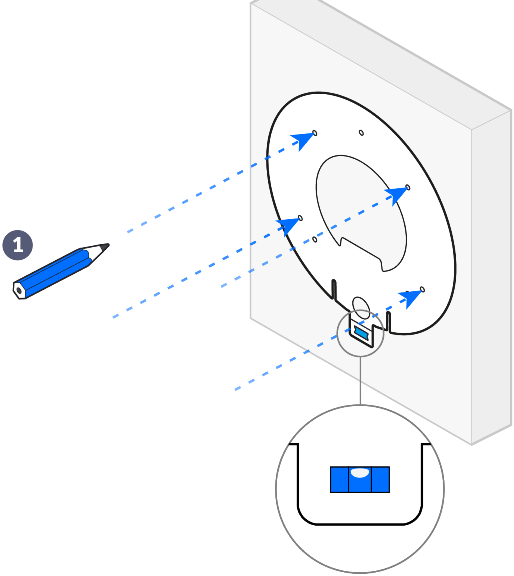

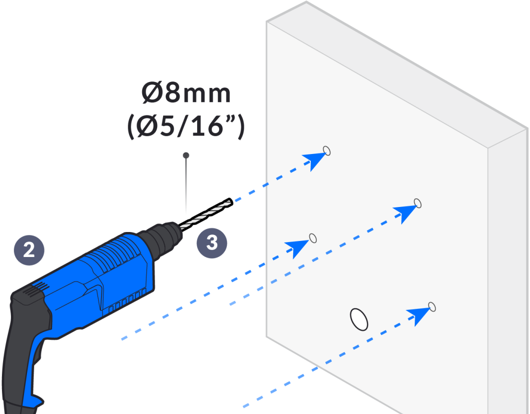
Ø8mm
(Ø5/16”)
2
3

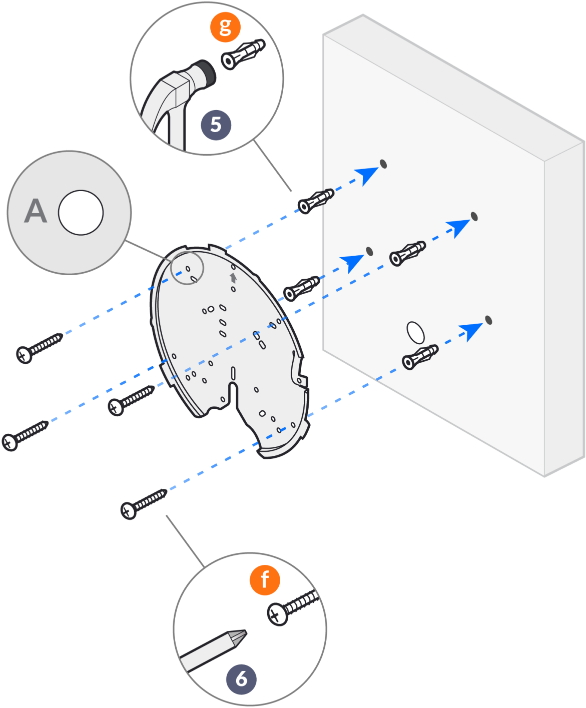

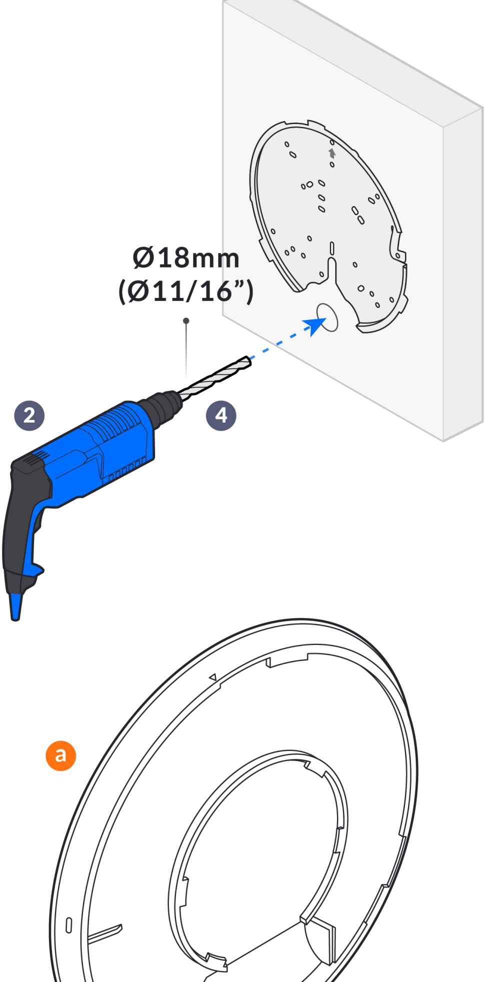
Ø18mm
(Ø11/16”)
2
4
a

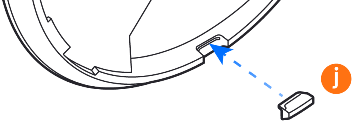

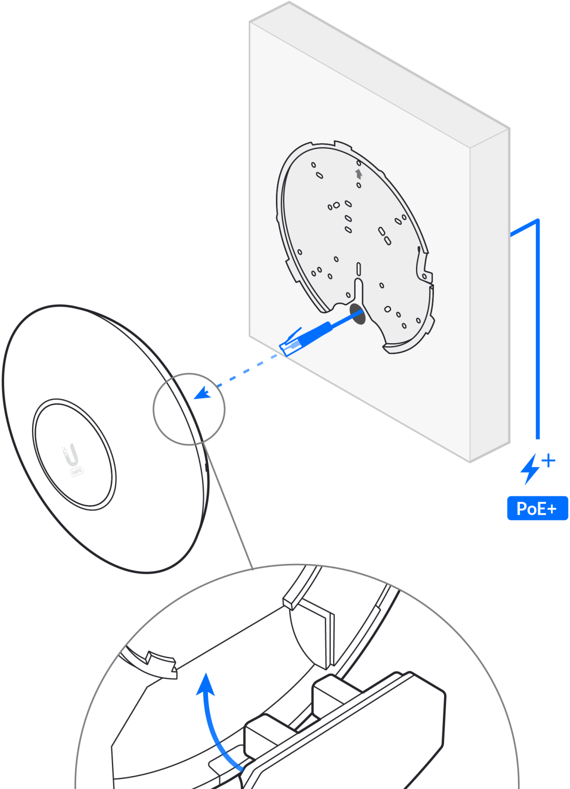

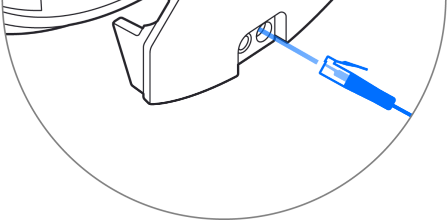

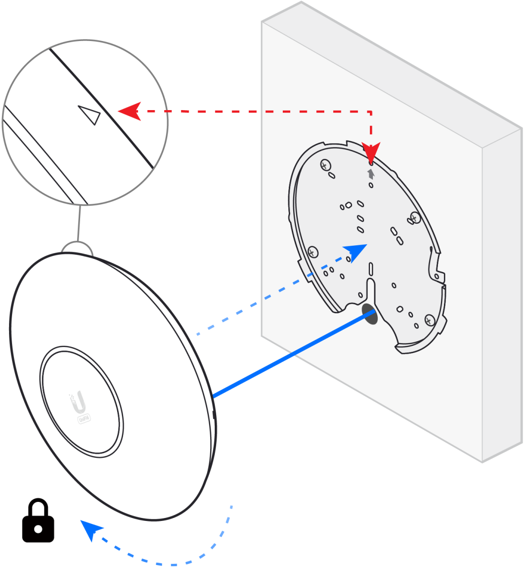

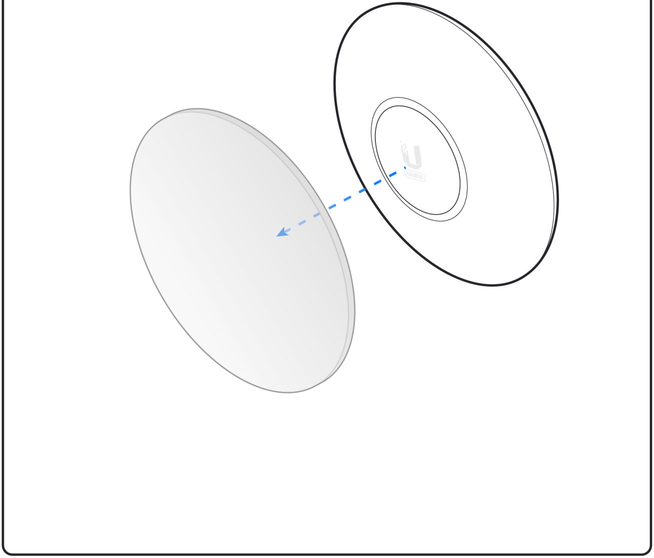

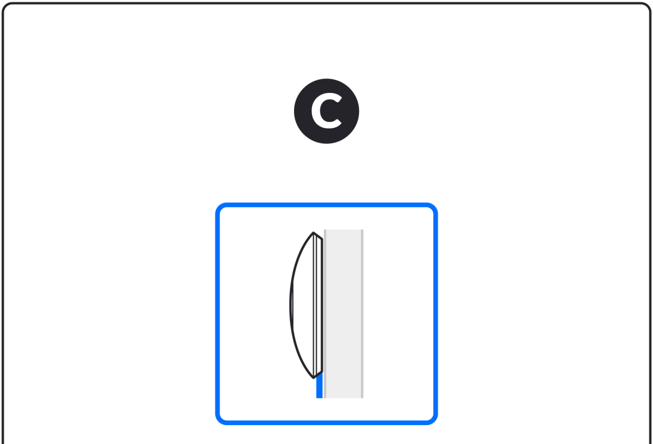

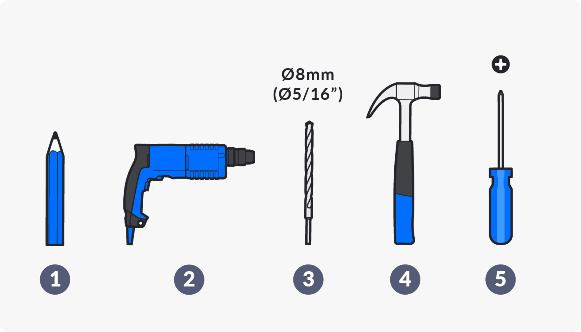
Ø8mm
(Ø5/16")
1
2
3
4
5

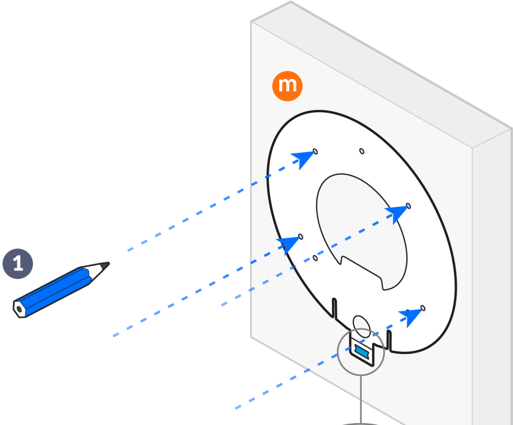

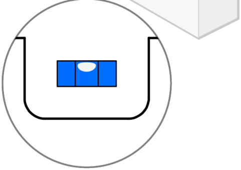

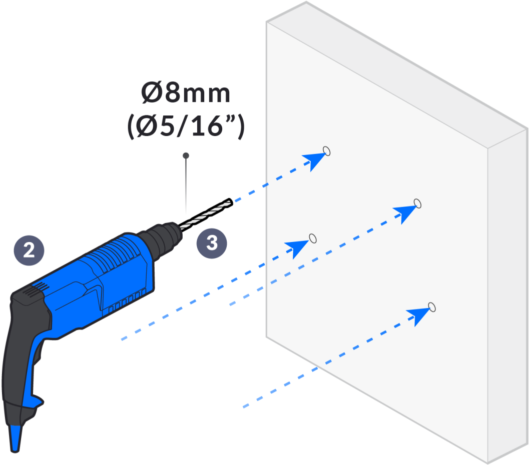
Ø8mm
(Ø5/16”)
2
3

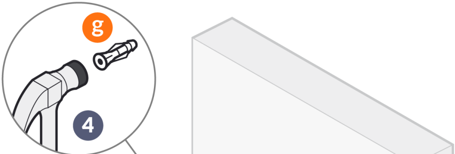

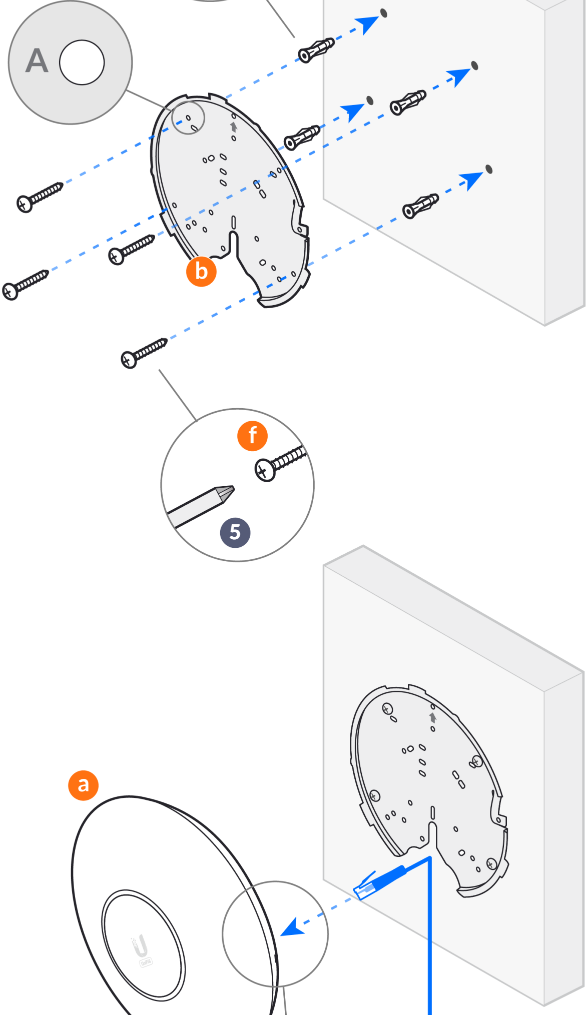

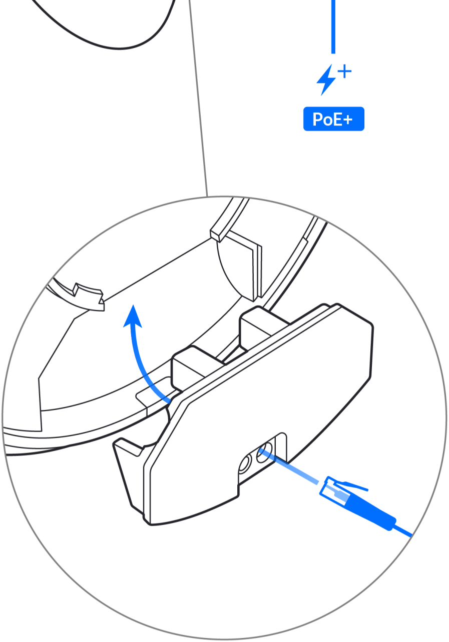

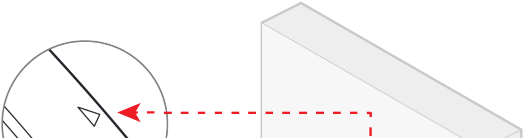

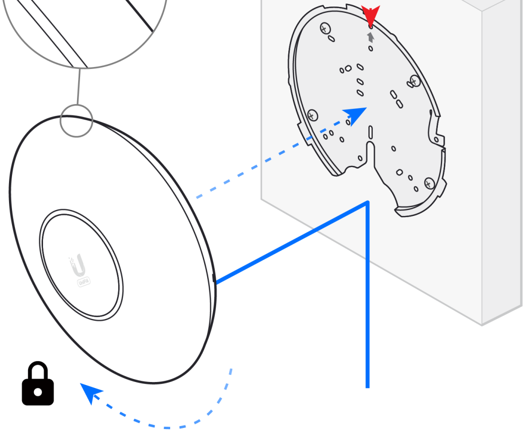

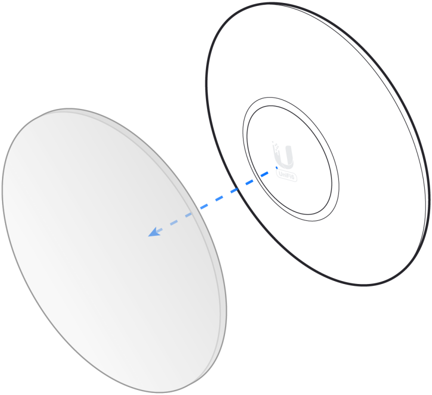

D

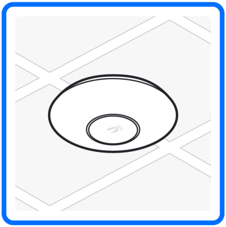

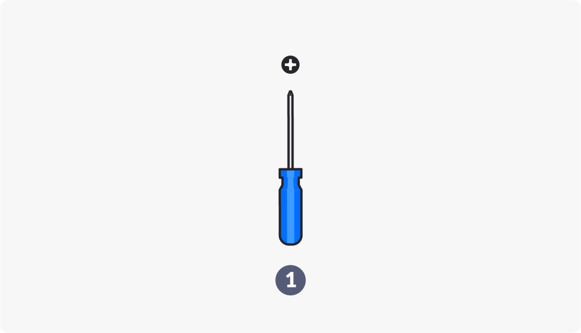

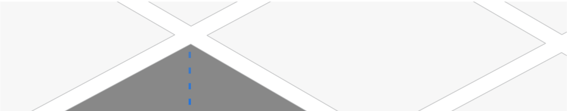

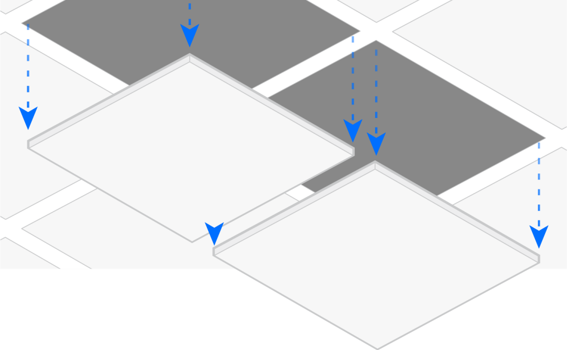

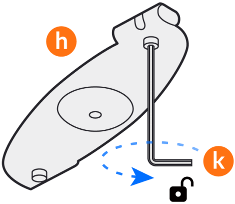

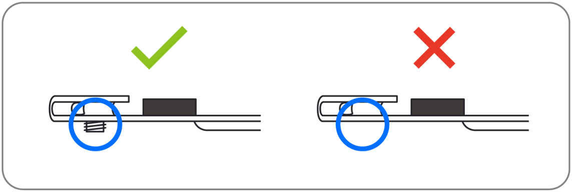

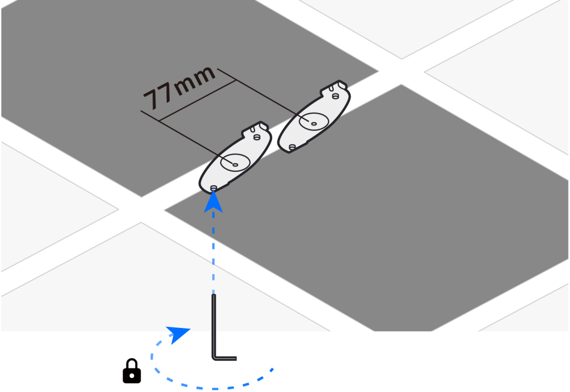

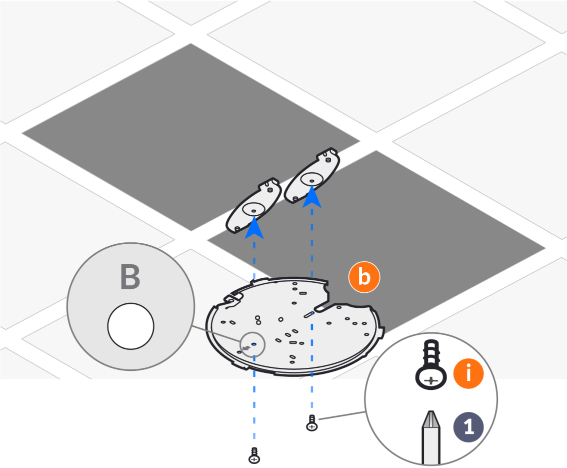

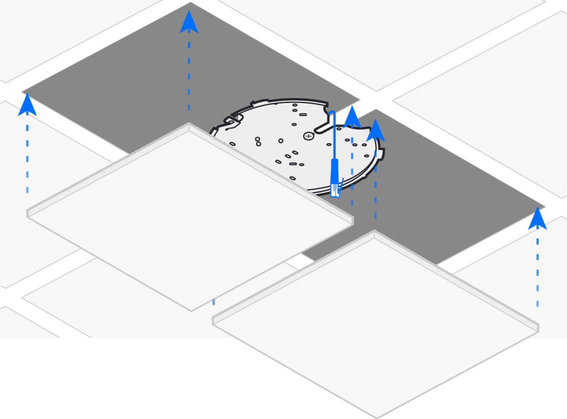

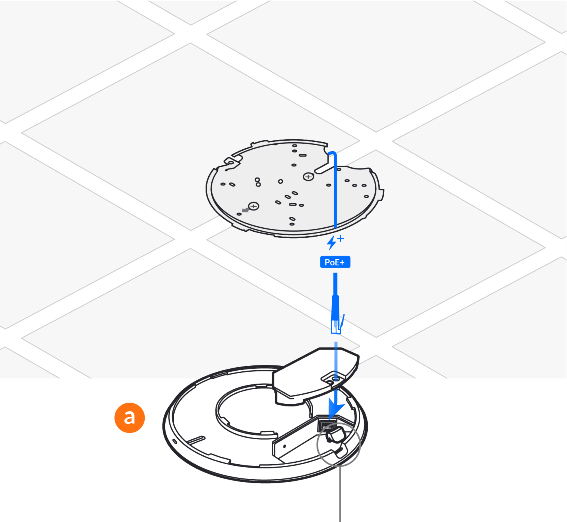

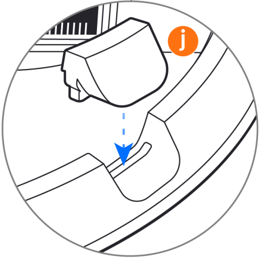

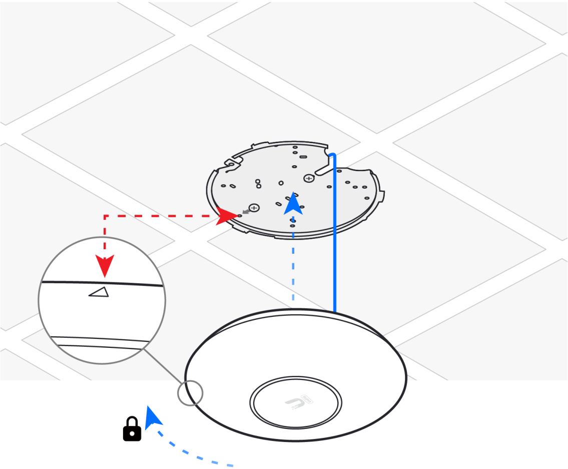

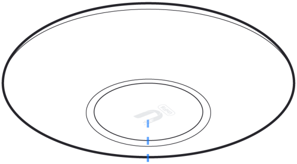

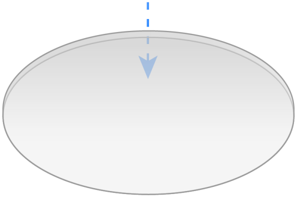

E

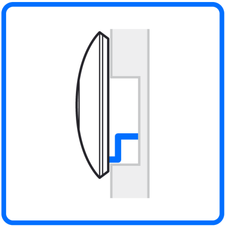

⊕

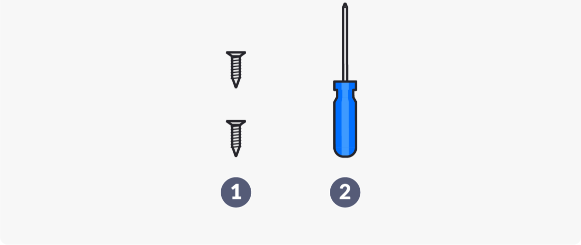

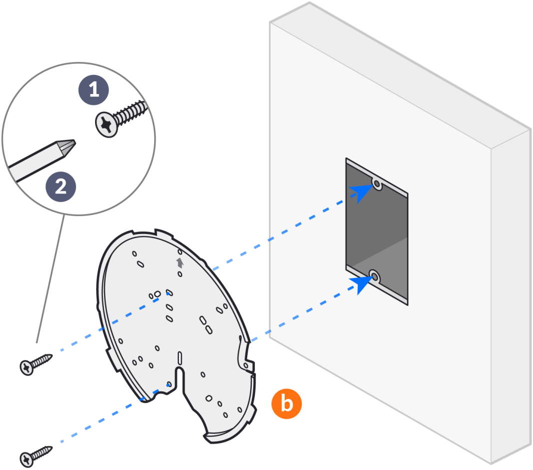

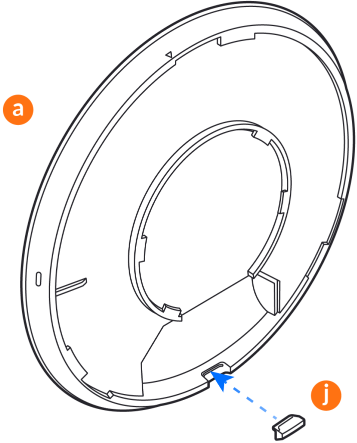

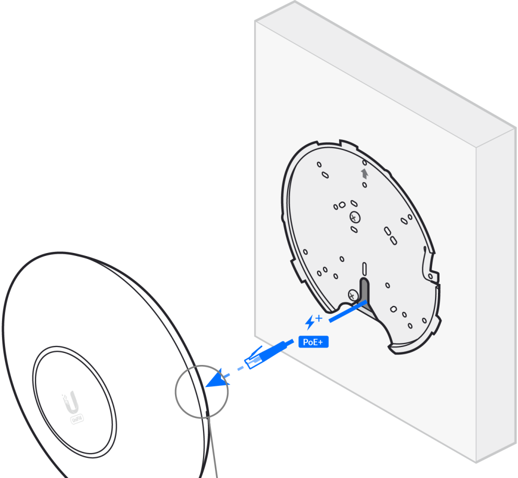

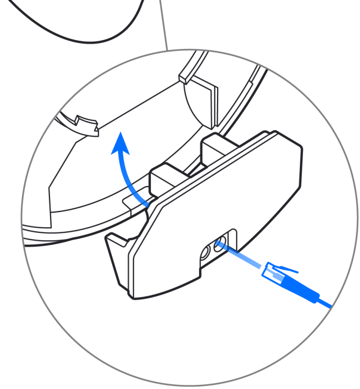

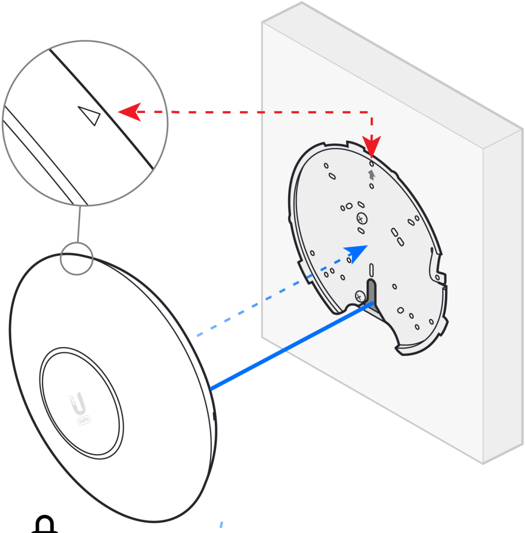

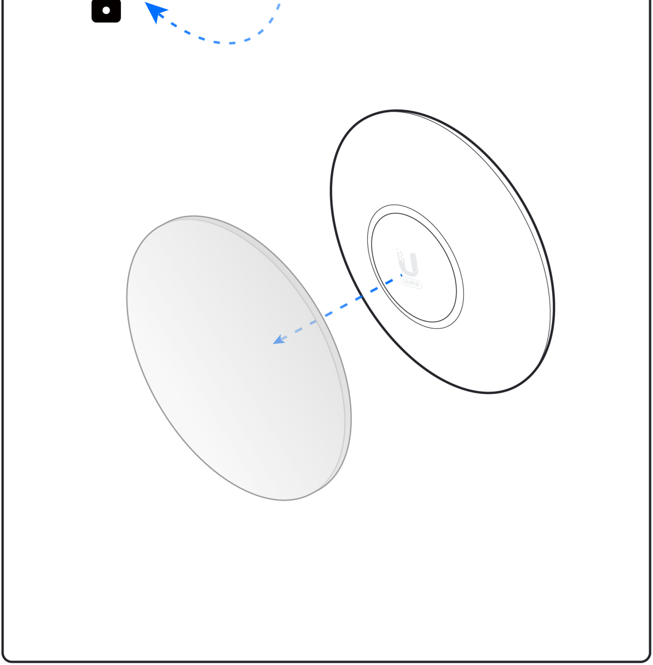

2

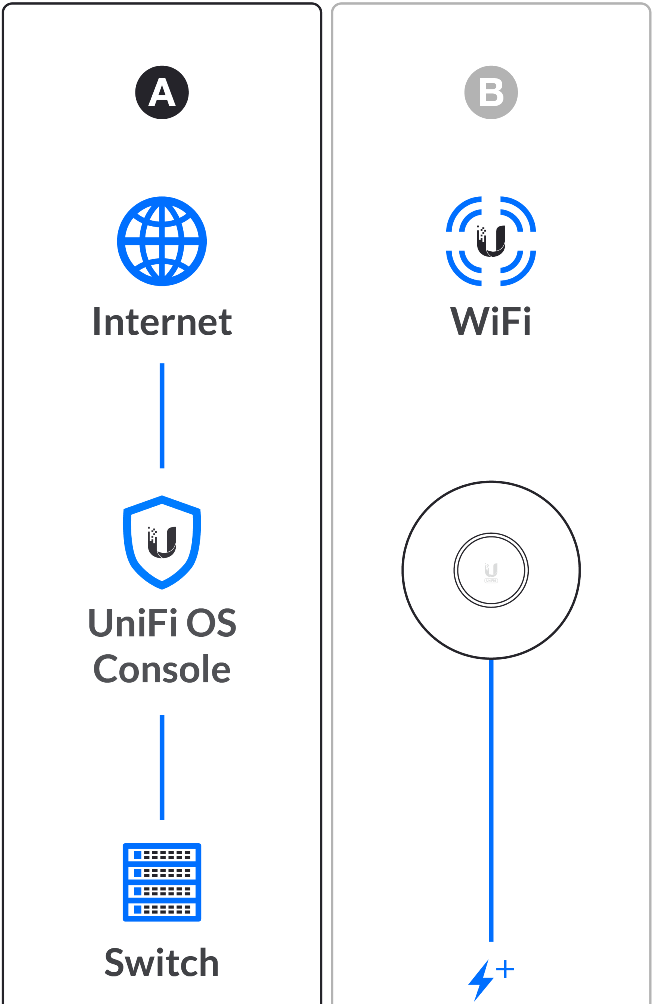
A
Internet
UniFi OS
Console
Switch
B
WiFi

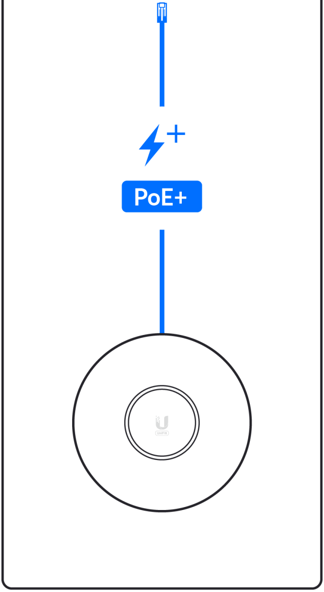

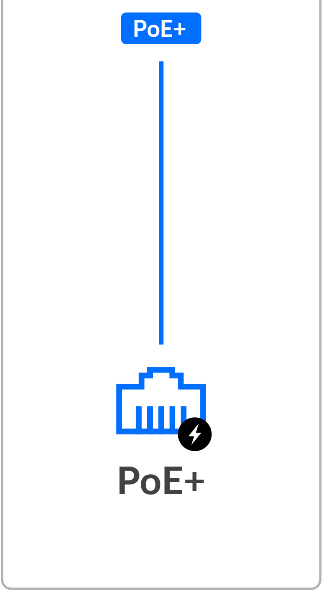

3

Download on the App Store

GET IT ON Google Play

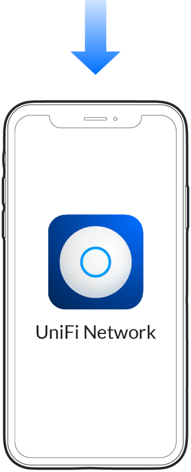
UniFi Network

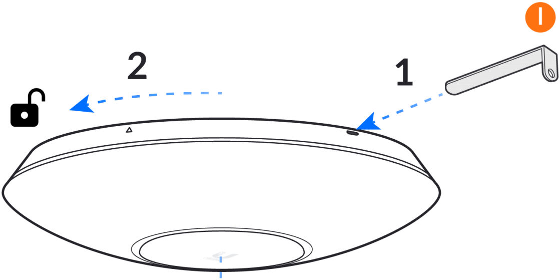

Get Answers
help.ui.com

UI Support

🔗

©2021 Ubiquiti Inc. All rights reserved. Ubiquiti, Ubiquiti Networks, the Ubiquiti U logo, UniFi, and UniFi Network are trademarks or registered trademarks of Ubiquiti Inc. in the United States and in other countries. App Store and the Apple logo are trademarks of Apple Inc., registered in the U.S. and other countries. Google Play and the Google Play logo are trademarks of Google LLC. All other trademarks are the property of their respective owners. This is a class A Product. In a domestic environment this product may cause radio interference in which case the user may be required to take adequate measures.